ADDVANTAGE–32 FUNCTION BLOCK DIAGRAM
SPEED/TENSION REGULATOR

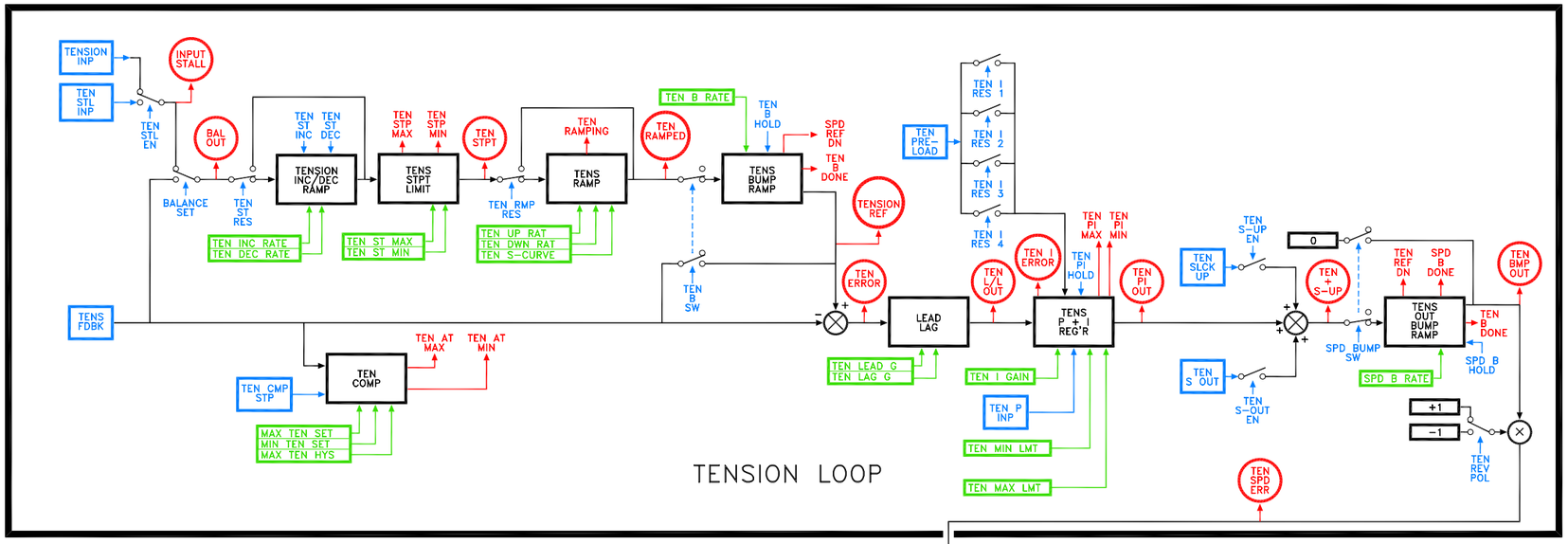

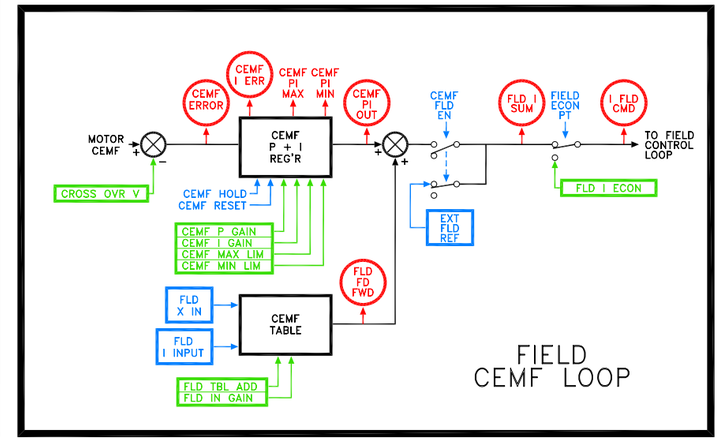

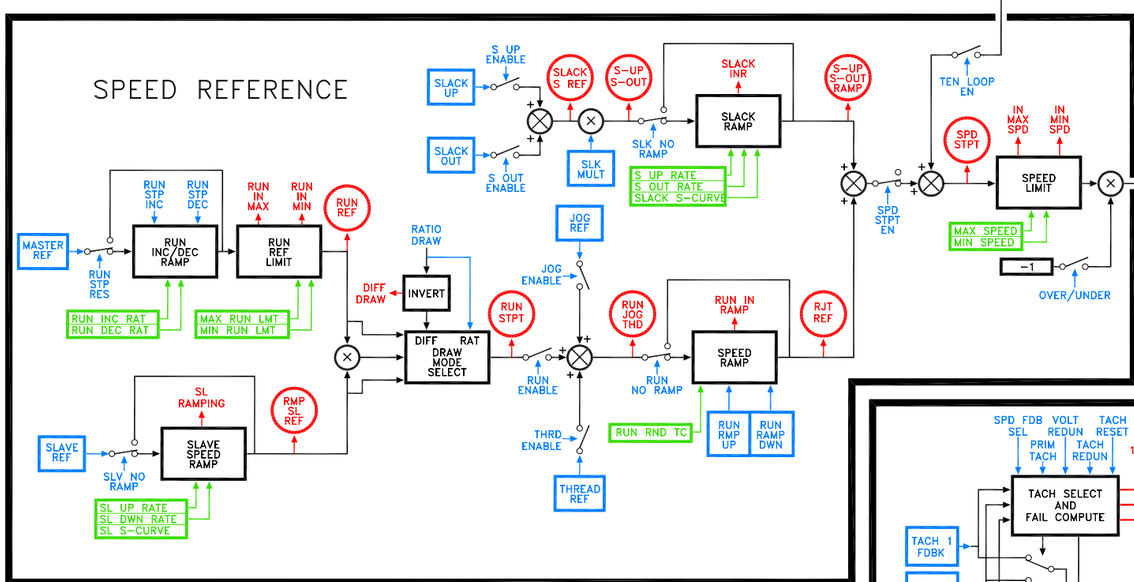

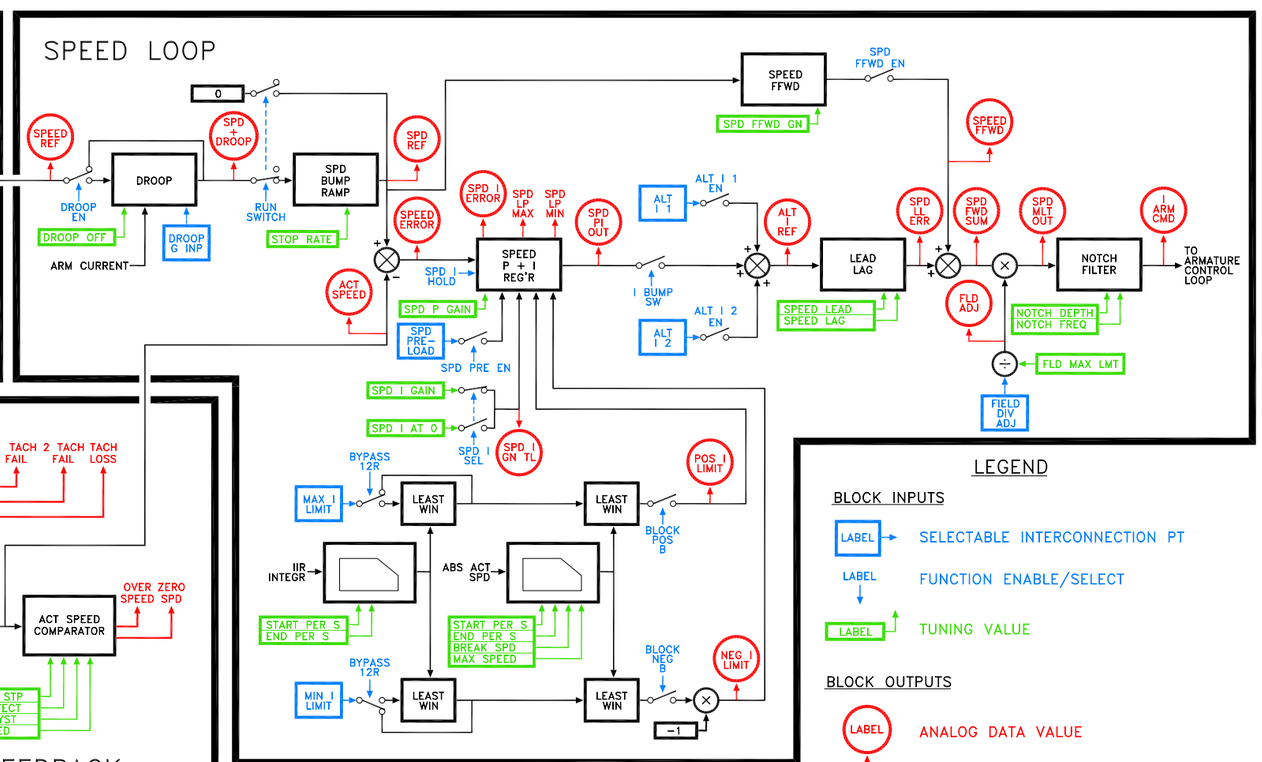

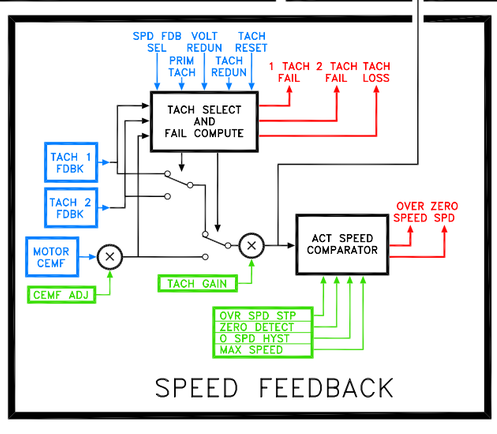

LEGEND

BLOCK INPUTS

- LABEL → SELECTABLE INTERCONNECTION PT
- LABEL ↓ FUNCTION ENABLE/SELECT
- LABEL ↑ TUNING VALUE

BLOCK OUTPUTS

- LABEL ANALOG DATA VALUE
- LABEL ↑ DIGITAL STATUS BIT

AVTRON

ADD32BLOCK2