Wheel ID Table (ØB)

KAL1229-32-	Nominal ID (mm)	ID Tolerance ISO	±mm
06	6.00	H7	+0.01, –0.00
08	8.00	H7	+0.01, –0.00
10	10.00	H7	+0.01, –0.00
25	6.35	—	–0.01, –0.03
31	7.94	—	–0.02, –0.03
38	9.53	—	–0.02, –0.03

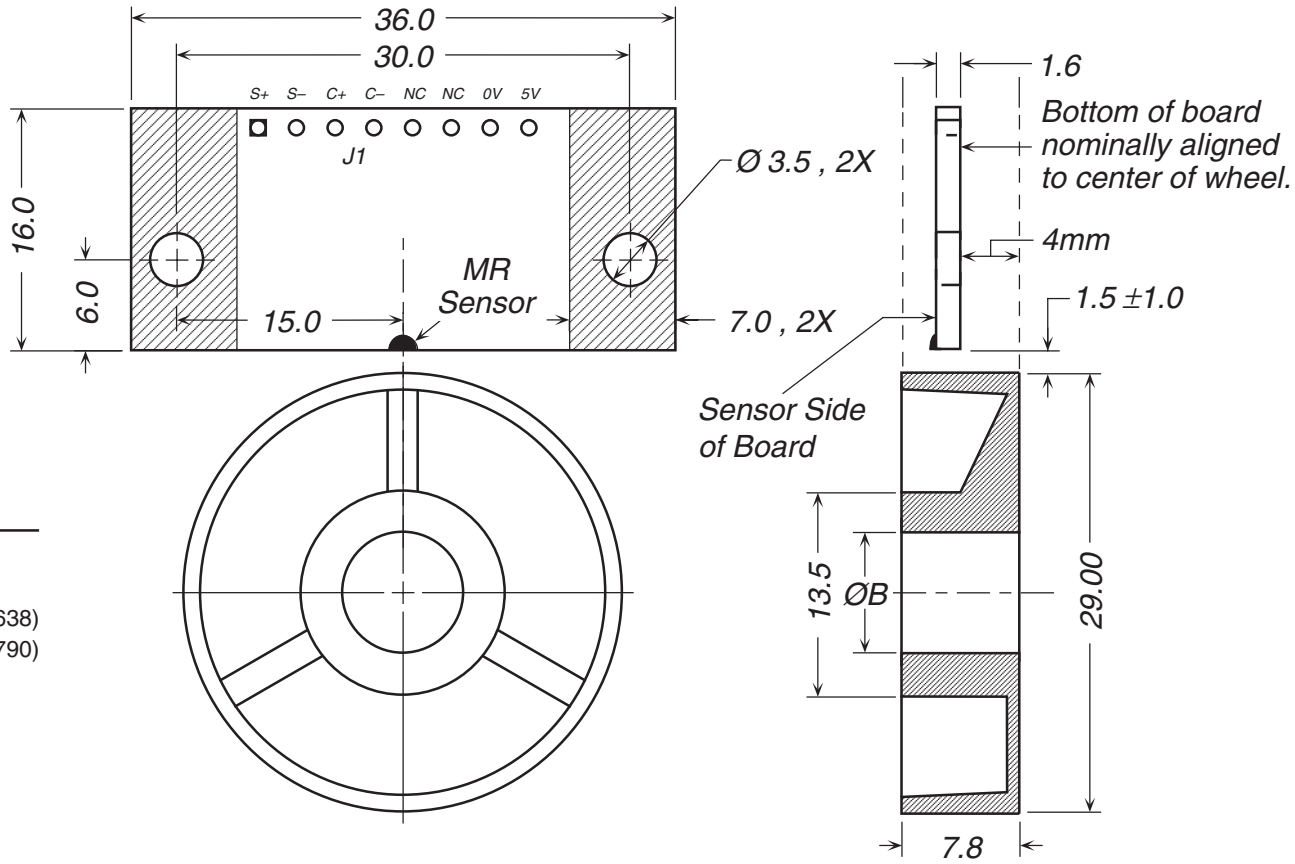

Wheel Reference Specifications

Mass	**5**	grams
Inertia	**4**	gram cm^2
Tensile Strength	**480**	kg/cm^2 (ASTM D-638)
Flexural Strength	**840**	kg/cm^2 (ASTM D-790)
Rockwell Hardness	**R110**	ASTM D-785

Sensor mounting area. Free of components and traces (both sides).

REFERENCE		MATERIAL *As shown.*	admotec — ADMOTEC INC., LEBANON NEW HAMPSHIRE USA
REVISIONS	DIMENSIONS IN MILLIMETERS TOLERANCES UNLESS OTHERWISE SPECIFIED .X: ± **0.10** .XX: ± **0.05** ANGLES: ± **0°30´**	HEAT TREAT *Not applicable.*	**KAL1229 Encoder Outline & Mounting**
		FINISH *Not applicable.*	
	THIS DRAWING IS THE PROPERTY OF ADMOTEC INC. IT MAY NOT BE COPIED, USED OR DISCLOSED FOR ANY PURPOSE WITHOUT WRITTEN PERMISSION BY ADMOTEC INC.	DRAWN *D Robinson* DATE *4 May 07*	DRAWING SIZE **A** — 7310-113 — REVISION —
		CHECKED DATE	SCALE *2:1* — SHEET *1* OF *1*
		APPROVED DATE	